8.

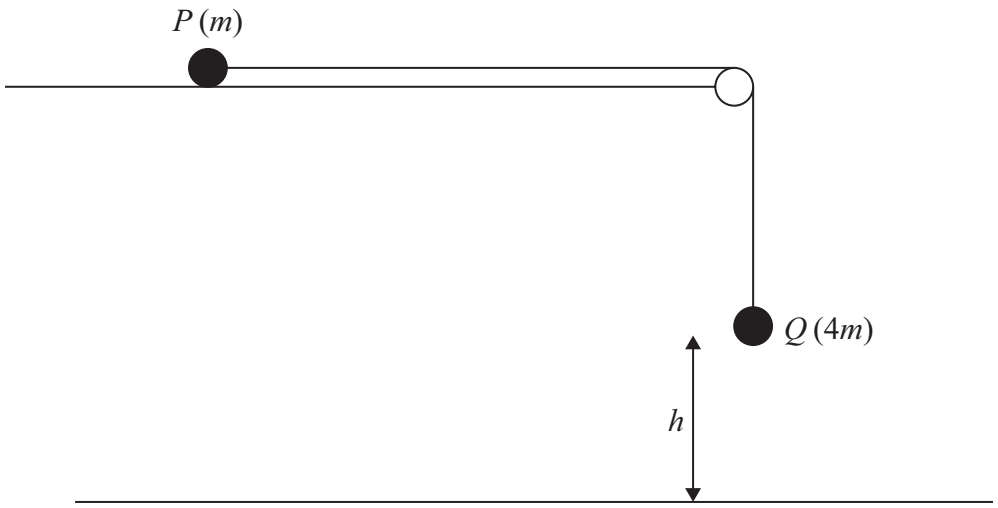

Figure 3

Two particles P and Q have masses m and $4m$ respectively.
Particle P is attached to one end of a light inextensible string and particle Q is attached to the other end.

Particle P is held at rest on a rough horizontal table. The string lies along the table and passes over a small smooth light pulley which is fixed at the edge of the table.
Particle Q hangs at rest vertically below the pulley, at a height h above a horizontal plane, as shown in Figure 3.

The coefficient of friction between P and the table is 0.5

Particle P is released from rest with the string taut and slides along the table.

(a) Find, in terms of mg, the tension in the string when both particles are moving.

(8)

The particle P does not reach the pulley before Q hits the plane.

(b) Show that the speed of Q immediately before it hits the plane is $\sqrt{1.4gh}$

(2)

When Q hits the plane, Q does not rebound and P continues to slide along the table.
Given that P comes to rest before it reaches the pulley,

(c) show that the total length of the string must be greater than $2.4h$

(6)

(Total for Question 8 is 16 marks)

TOTAL FOR PAPER IS 75 MARKS