2. **In this question you must show all stages of your working.**

Solutions based entirely on calculator technology are not acceptable.

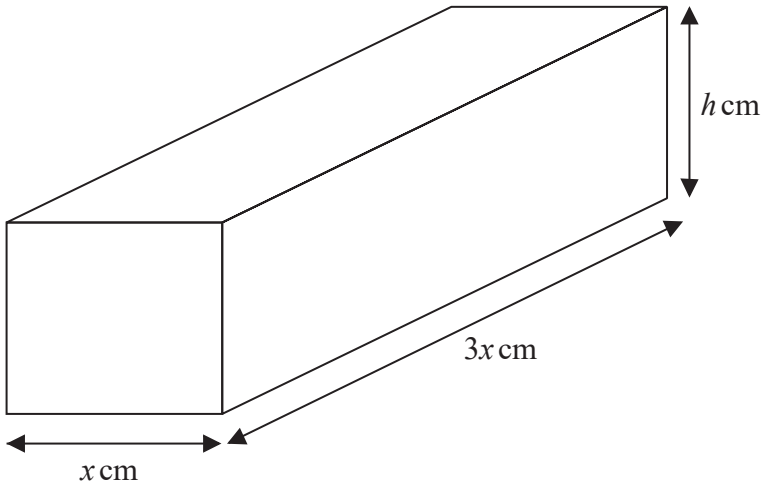

Figure 2

A brick is in the shape of a cuboid with width x cm, length $3x$ cm and height h cm, as shown in Figure 2.

The volume of the brick is 972 cm^3

(a) Show that the surface area of the brick, S cm^2, is given by

$$S = 6x^2 + \frac{2592}{x}$$

(3)

(b) Find $\dfrac{\mathrm{d}S}{\mathrm{d}x}$

(1)

(c) Hence find the value of x for which S is stationary.

(2)

(d) Find $\dfrac{\mathrm{d}^2S}{\mathrm{d}x^2}$ and hence show that the value of x found in part (c) gives the minimum value of S.

(2)

(e) Hence find the minimum surface area of the brick.

(1)

DO NOT WRITE IN THIS AREA
DO NOT WRITE IN THIS AREA
DO NOT WRITE IN THIS AREA

DO NOT WRITE IN THIS AREA
DO NOT WRITE IN THIS AREA
DO NOT WRITE IN THIS AREA

Question 2 continued

Question 2 continued

DO NOT WRITE IN THIS AREA

DO NOT WRITE IN THIS AREA

DO NOT WRITE IN THIS AREA

Question 2 continued

(Total for Question 2 is 9 marks)

DO NOT WRITE IN THIS AREA
DO NOT WRITE IN THIS AREA
DO NOT WRITE IN THIS AREA

3. $f(x) = \left(2 + \frac{kx}{8}\right)^7$ where k is a non-zero constant

(a) Find the first 4 terms, in ascending powers of x, of the binomial expansion of $f(x)$. Give each term in simplest form.

(4)

Given that, in the binomial expansion of $f(x)$, the coefficients of x, x^2 and x^3 are the first 3 terms of an arithmetic progression,

(b) find, using algebra, the possible values of k.

(*Solutions relying entirely on calculator technology are not acceptable.*)

(3)

DO NOT WRITE IN THIS AREA
DO NOT WRITE IN THIS AREA
DO NOT WRITE IN THIS AREA