Question Number	Scheme	Marks
7(a)	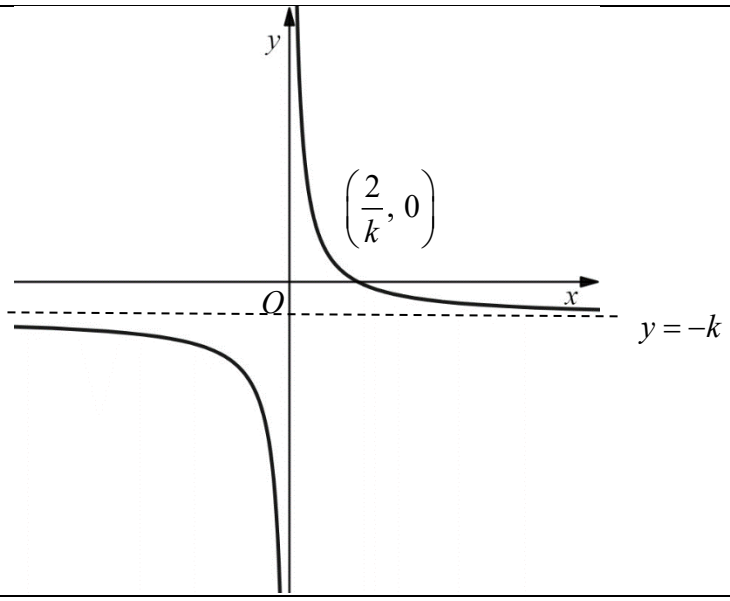	B1B1B1
		(3)
(b)	$-kx-6=\frac{2}{x}-k \Rightarrow -kx^2-6x=2-kx \Rightarrow kx^2+(6-k)x+2=0$ $(6-k)^2-4\times k\times 2 \Rightarrow k^2-20k+36$ $\Rightarrow \text{CVs}=2,18 \Rightarrow k<"2" \text{ or } k>"18"$ $(0<)k<2 \text{ or } k>18$	M1 dM1A1 M1 A1
		(5)
		(8 marks)

(a)

B1 Correct positive reciprocal shape graph in the correct position:

- The left branch must appear in quadrant 3 only
- The right branch must appear in both quadrants 1 and 4 only
- It must be drawn on a set of axes
- Condone slips provided a maximum or minimum is not intended

B1 Intersects the x-axis at $\left(\frac{2}{k}, 0\right)$ only. Condone $\left(0, \frac{2}{k}\right)$ provided it is marked in the correct place. May just see $\frac{2}{k}$ labelled which is acceptable. Do not be concerned by missing brackets.

B1 $y=-k$ Dashed lines are not needed on the sketch but if this asymptote is indicated on the sketch with dashed/solid lines then it must be a horizontal asymptote below the x-axis. Ignore any reference to a vertical asymptote. $y=-k$ must be labelled on the diagram (not just $-k$) or if labelled as $-k$ then $y=-k$ must be clearly identified as the asymptote in their working. Do not withhold this mark if they appear to have two horizontal asymptotes i.e. if the right branch is only in quadrant 1.

Examples

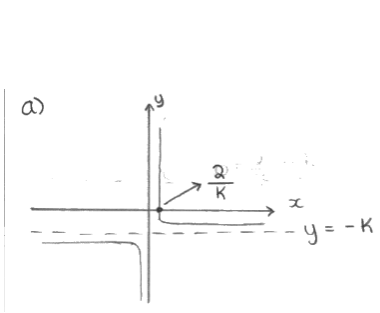

B1B1B1 (condone linearity)

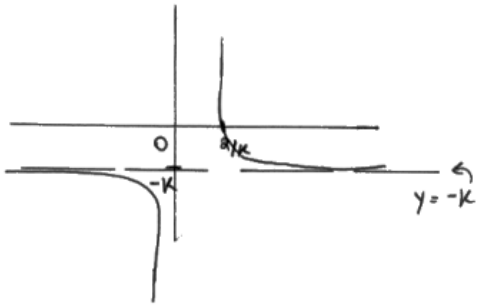

B1B1B1 (condone the right arm as long as not intending to curve back on itself/two vertical asymptotes not labelled)

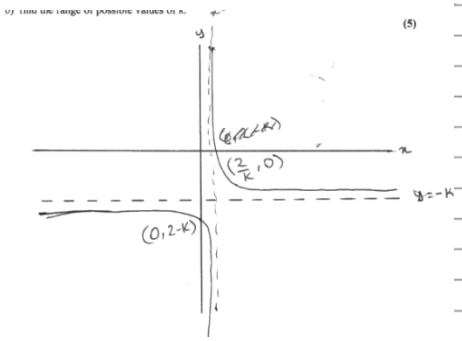

B0B1B1

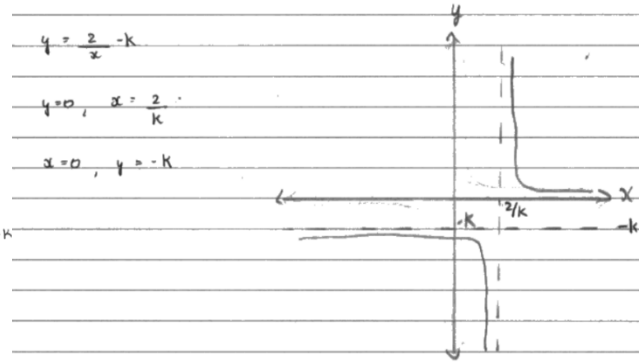

B0B0B0 ($-k$ marked is insufficient for third B1 and $y=-k$ is not clearly identified as an asymptote)

(b)

M1 Sets the equation of the curve equal to the equation of the line, multiplies both sides by x and collects terms on one side of the equation. They do not need to simplify to a 3 term quadratic in x for this mark but it requires an equation which would simplify to $...kx^2 \pm (...k \pm ...)x \pm ... = 0$ Condone slips and = 0 may be implied by attempting the discriminant.

dM1 Attempts the discriminant (ignore > < or = 0) for their 3TQ in x and rearranges to a 3TQ in k. Condone slips and do not be concerned by the mechanics of the rearrangement. It is dependent on the first method mark.

A1 $\pm\left(k^2 - 20k + 36\right)$ (ignore > < or = 0)

M1 Finds the critical values (which may be directly from a calculator) from their quadratic in k and attempts the outside regions (usual rules apply for solving a quadratic). May just appear as their final answer.
Do not be concerned with „ or … instead of $<$ or $>$. If just the roots are stated for their quadratic with no method shown you may need to check this for their quadratic and look for both values to be correct to 2sf.
Condone e.g. "18" $< k <$ "2" or e.g. $(-\infty, 2)$ $(18, \infty)$ to indicate the outside regions for this mark
May be in terms of x

A1 $(0<)k<2$ or $k>18$ **Must be in terms of *k***
Accept alternatives representing the same set of inequalities. e.g. $\{(0<)k<2 \cup k>18\}$ or $(0,2)$ $(18,\infty)$ "$k>18$, $k<2$" Ignore $k \neq 0$ if stated. $18<k<2$ is A0
Withhold this mark for use of AND o.e. (i.e. $\cap$) or if they have inequalities which would include 2 and/or 18.
If a lower limit is given then it must be $k>0$ e.g. 0 „ $k<2$, $k>18$ is A0.

Question Number	Scheme	Marks
8(a)	$\dfrac{\sin OAB}{3.4}=\dfrac{\sin\left(\frac{\pi}{6}\right)}{1.9}\Rightarrow OAB=2.034$	M1A1A1
		(3)
(b)	$\text{Area}=\dfrac{1}{2}\times 3.4\times 1.9\times\sin\left(\pi-\dfrac{\pi}{6}-"2.034"\right)=\text{awrt}\,1.78\ \ (\text{cm}^2)$	M1A1
		(2)
(c)	Area of sector $OBC="1.78"\times\dfrac{3}{2}$ $(="2.67")$	M1
	$\dfrac{1}{2}\times 3.4^2\times\theta="\dfrac{1.78\times 3}{2}"$	M1
	$\theta=\text{awrt}\,0.462$ *	A1*
		(3)
(d)	$OA=\sqrt{3.4^2+1.9^2-2\times 3.4\times 1.9\times\cos\left(\pi-\dfrac{\pi}{6}-"2.034"\right)}$	M1
	$OA=\text{awrt}\,2.1\ \ (\text{cm})$	A1
	Length of arc $BC=0.462\times 3.4$ $(=1.57...)$	B1
	$\text{Perimeter}=3.4+1.9+"2.1"+0.462\times 3.4$	dM1
	$=\text{awrt}\ 9\,(\text{cm})$	A1
		(5)
		(13 marks)

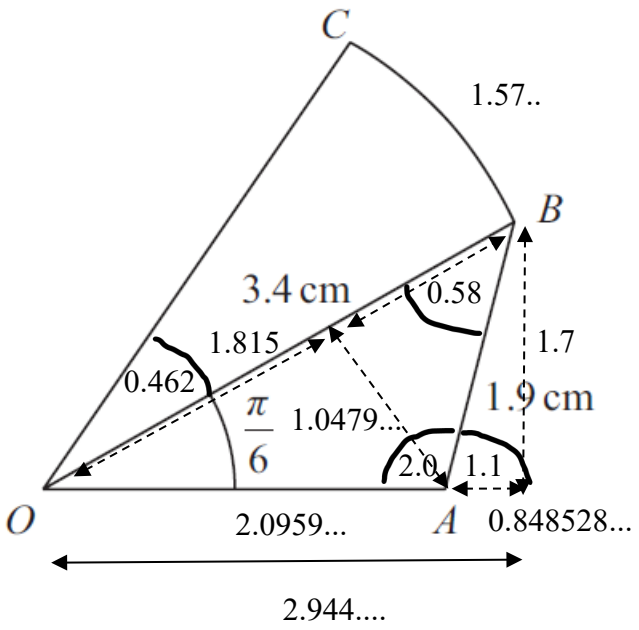

Note that in all parts they may work in degrees and convert back where appropriate which is acceptable. If they do not then the method marks are still available. We do not need to see the conversion, but in calculations they cannot have a mix of radians and degrees in the same expression/equation