7.

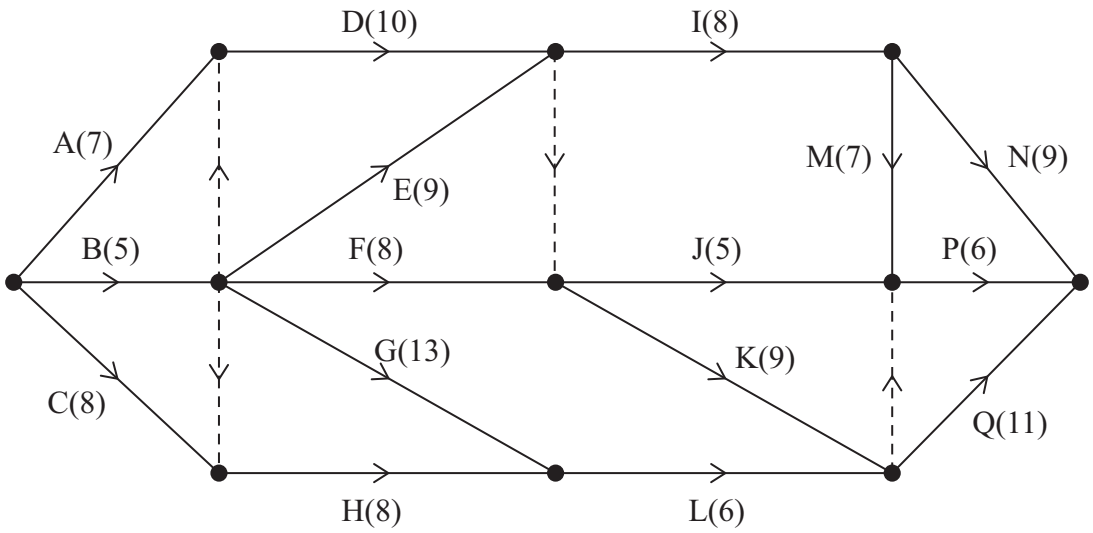

Figure 3

A project is modelled by the activity network shown in Figure 3. The activities are represented by the arcs. The number in brackets on each arc gives the time, in days, to complete the activity. Each activity requires exactly one worker. The project is to be completed in the shortest possible time.

(a) Complete the table in the answer book to show the immediately preceding activities for the network.

(3)

(b) Complete the diagram in the answer book to show the early event times and the late event times.

(4)

(c) State the critical activities.

(1)

(d) Calculate a lower bound for the minimum number of workers required to complete the project in the minimum time.

(2)

(e) On the grid in the answer book, draw a schedule to show how the activities can be completed in the minimum time, using the minimum number of workers.

(4)

(Total for Question 7 is 14 marks)

7.

Activity	Immediately preceding activities
A	-
B	-
C	-
D	A B
E	B
F	B
G	B
H	
I	
J	
K	
L	
M	
N	
P	
Q	

DO NOT WRITE IN THIS AREA
DO NOT WRITE IN THIS AREA
DO NOT WRITE IN THIS AREA

Question 7 continued

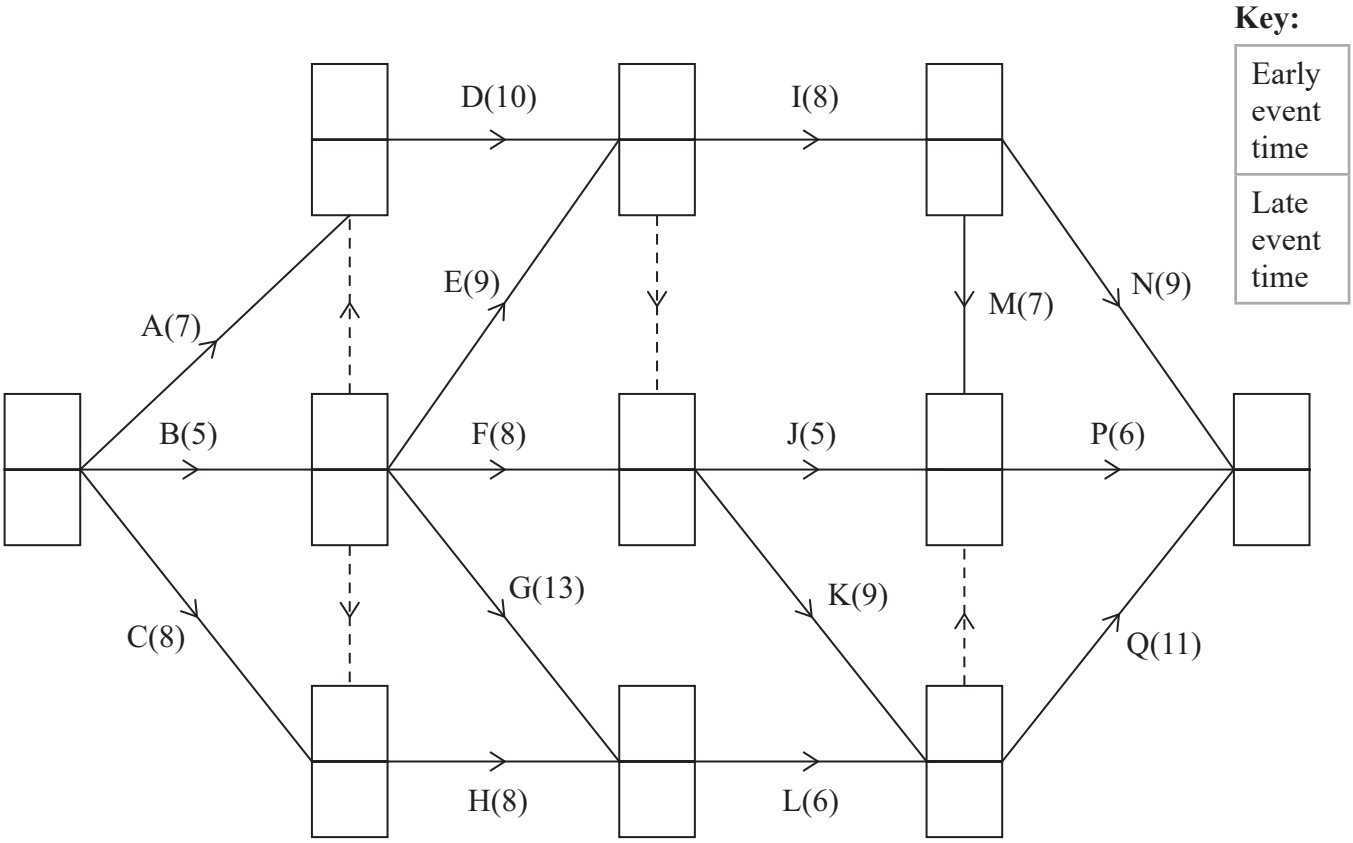

DO NOT WRITE IN THIS AREA
DO NOT WRITE IN THIS AREA
DO NOT WRITE IN THIS AREA

Question 7 continued

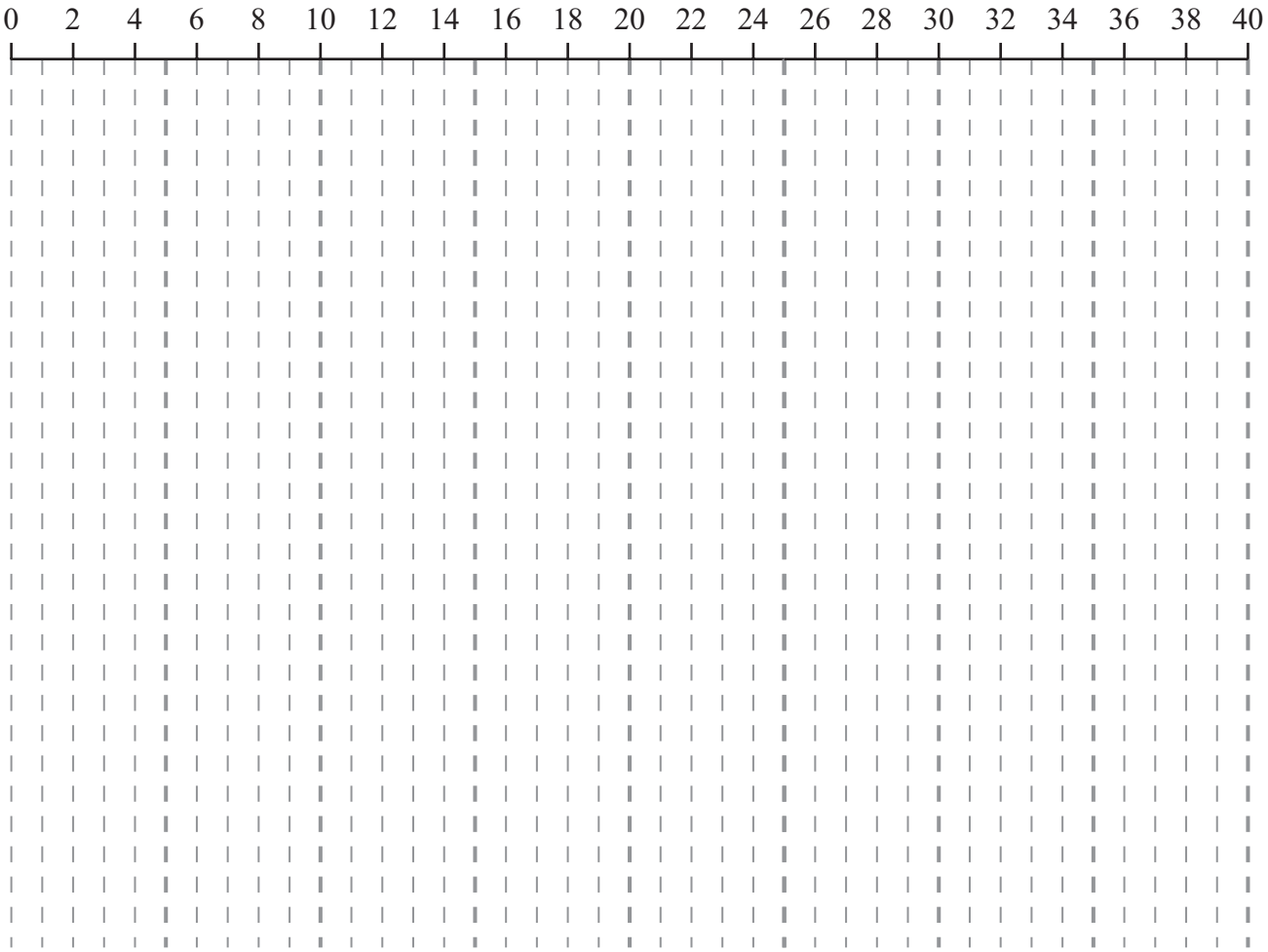

(Total for Question 7 is 14 marks)

DO NOT WRITE IN THIS AREA
DO NOT WRITE IN THIS AREA
DO NOT WRITE IN THIS AREA