7.

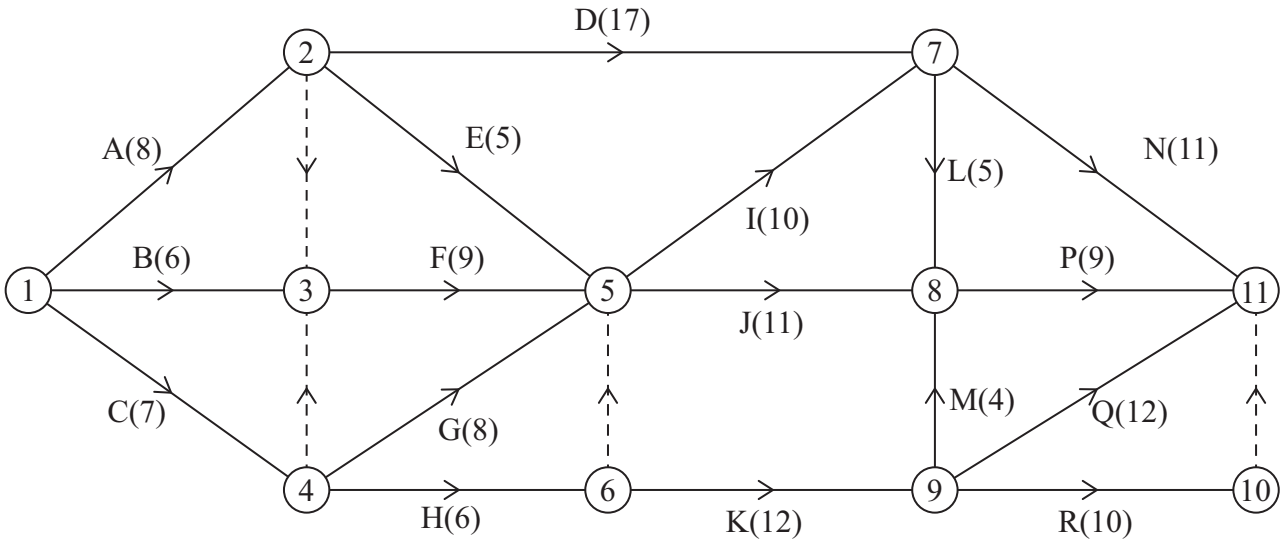

Figure 3

A project is modelled by the activity network shown in Figure 3. The activities are represented by the arcs. The number in brackets on each arc gives the time, in days, to complete the activity. Each activity requires exactly one worker. The project is to be completed in the shortest possible time.

(a) Explain the purpose of the dummy between event 10 and event 11

(1)

(b) Complete Diagram 1 in the answer book to show the early event times and the late event times.

(4)

(c) State the critical activities.

(1)

(d) Calculate the maximum number of days by which activity K could be delayed without lengthening the completion time of the project. You must make the numbers used in your calculation clear.

(2)

(e) Draw a Gantt (cascade) chart on the grid in the answer book.

(4)

(f) Use the Gantt chart to determine a lower bound for the minimum number of workers required to complete the project in the minimum time. You must make specific reference to the number of workers, activities and times.

(2)

(Total for Question 7 is 14 marks)

7.

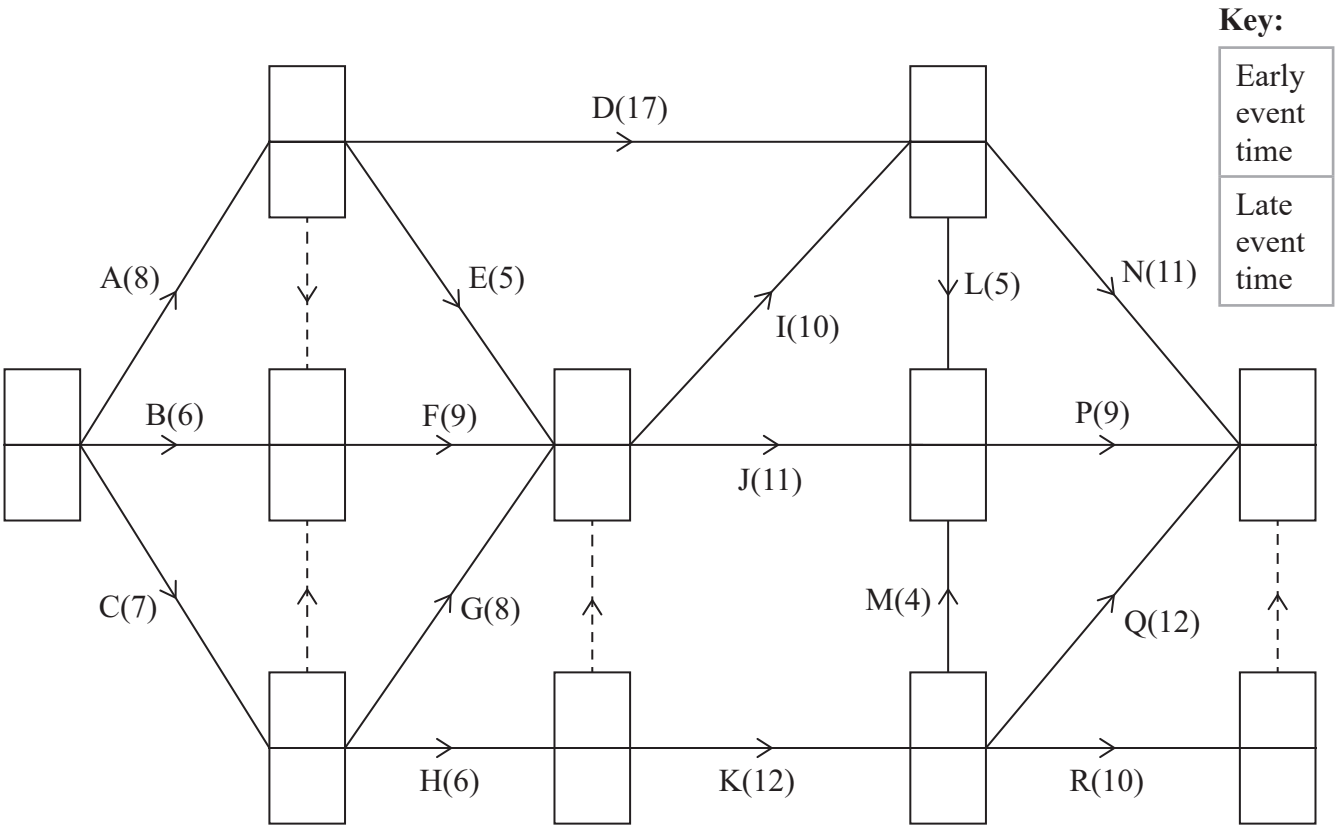

Diagram 1

DO NOT WRITE IN THIS AREA
DO NOT WRITE IN THIS AREA
DO NOT WRITE IN THIS AREA

Question 7 continued

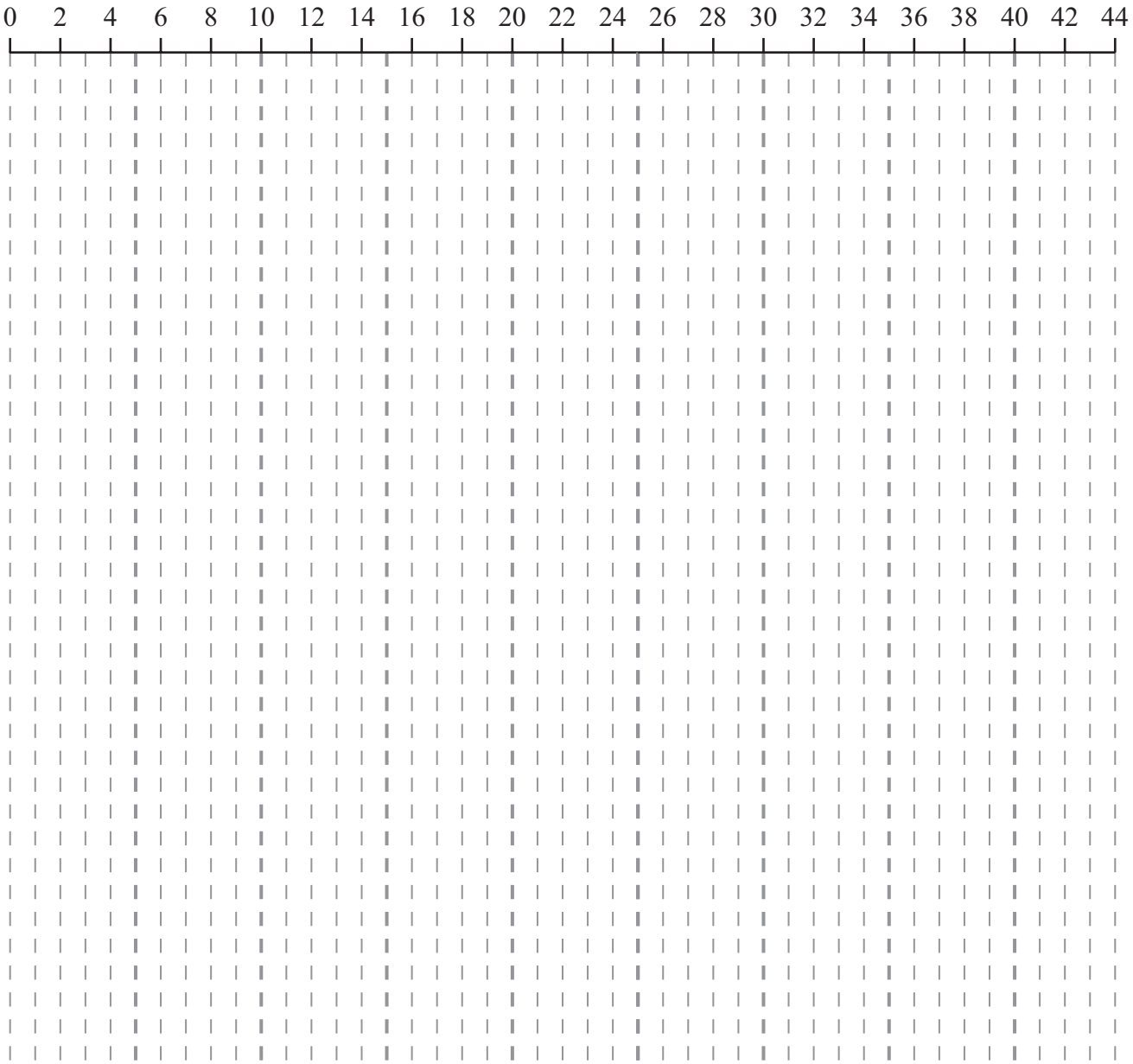

(Total for Question 7 is 14 marks)

DO NOT WRITE IN THIS AREA

DO NOT WRITE IN THIS AREA

DO NOT WRITE IN THIS AREA