4.

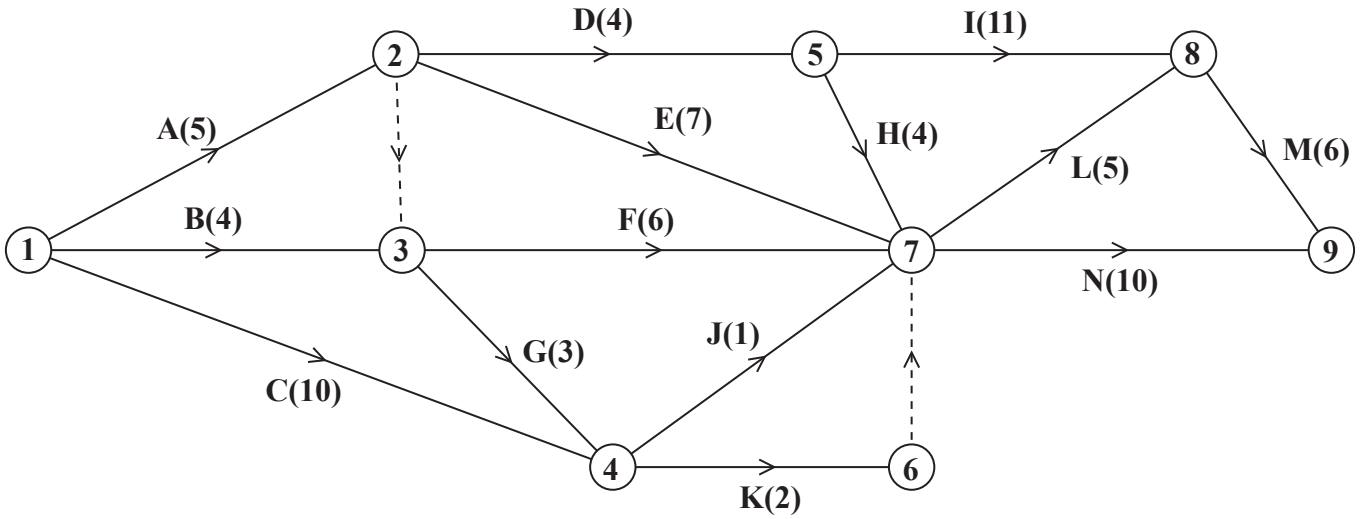

Figure 3

A project is modelled by the activity network shown in Figure 3. The activities are represented by the arcs. The number in brackets on each arc gives the time required, in hours, to complete the corresponding activity. The numbers in circles are the event numbers.

(a) Explain the significance of the dummy activity

(i) from event 2 to event 3

(ii) from event 6 to event 7

(2)

(b) Complete Diagram 1 in the answer book to show the early event times and the late event times.

(4)

(c) State the minimum project completion time and list the critical activities.

(2)

The duration of activity H changes to x hours.

(d) Find, in terms of x where necessary,

(i) the possible new early event time for event 7

(ii) the possible new late event time for event 7

(3)

Given that the duration of activity H is such that the minimum project completion time is four hours greater than the time found in (c),

(e) determine the value of x.

(1)

(Total 12 marks)

Leave blank

4.

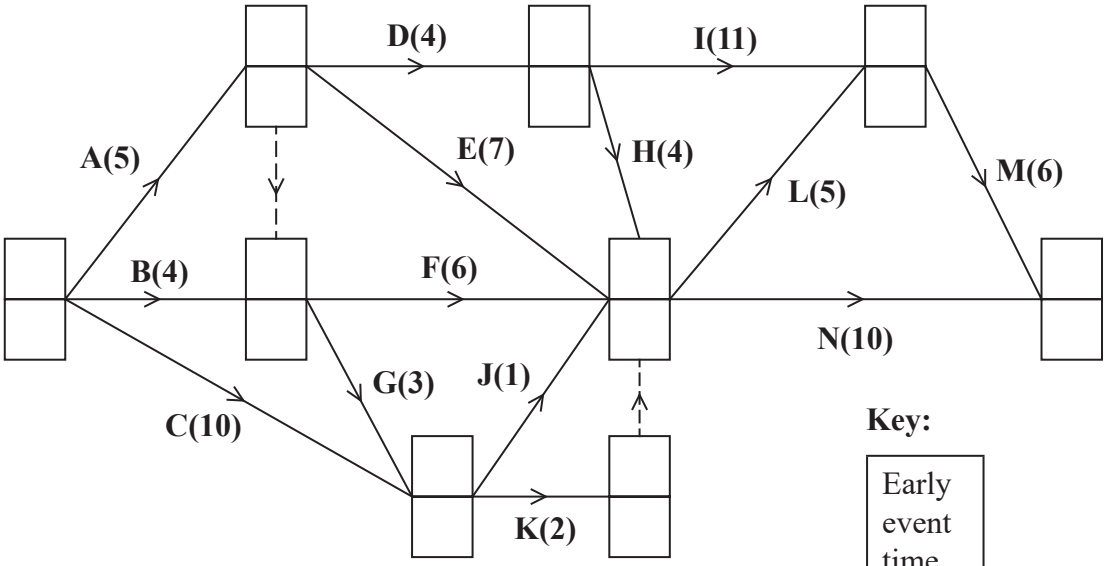

Diagram 1

DO NOT WRITE IN THIS AREA
DO NOT WRITE IN THIS AREA
DO NOT WRITE IN THIS AREA

DO NOT WRITE IN THIS AREA
DO NOT WRITE IN THIS AREA
DO NOT WRITE IN THIS AREA

Leave blank

Question 4 continued

Q4

(Total 12 marks)